Assembling an Endurance 10w Laser Kit Step By Step

By Matt McIntosh - mattm58@gmail.com

Table of Contents

What you'll need that's not in the kit:

- Soldering Iron
- Solder
- 12v light bulb (for tuning DC-DC). I used a cheap 50w landscape lighting bulb
- Control Box to house everything. You can 3d print one from here: https://www.thingiverse.com/thing:3268195 or go cheap and pick up a simple plastic box. Mine is a clear crayon box found in the school supplies at Wal-Mart for $1.
- Small phillips screwdriver
- Tiny flat screwdriver
- Wire strippers/clippers
- Multimeter (voltmeter/ammeter)
- Wire harness with 3 pin JST-XH connector plug for TTL on eleksmaker control board (maybe 2, see note in assembling control box step)

Verify you have all the parts

After you get your kit, verify you've got everything as pictured below:

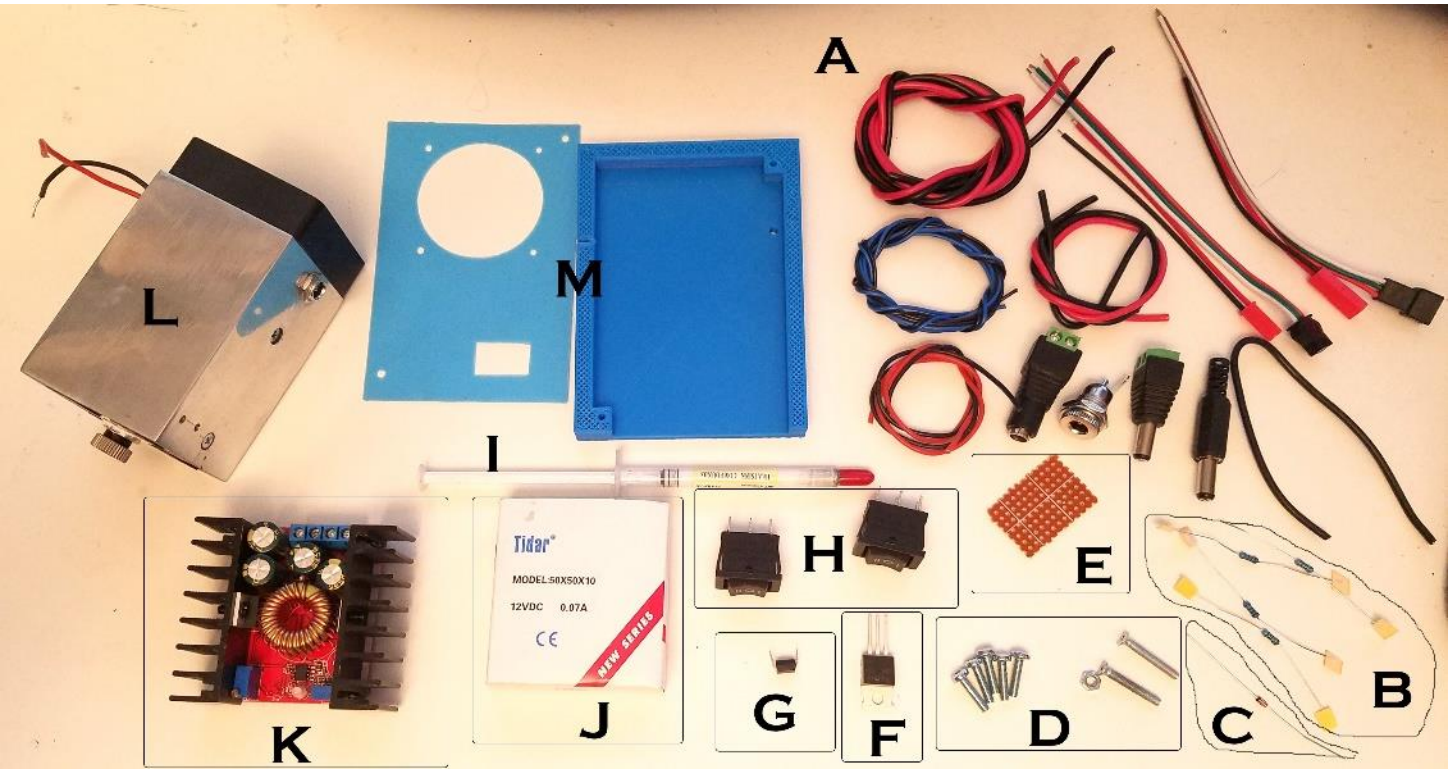

You'll have:

A – handful of wires and connector pieces & input jack
B – 4 resistors
C – Zener diode
D – some screws for attaching the fan to case & case lid to box
E – board for assembling MO1
F – IRFZ44N mosfet
G – PC817 Optocoupler
H – switches
I – thermal paste – only needed if you need to rehouse the laser in the heat sink
J – fan for control box
K – a DC-DC stepdown converter
L – the laser diode & housing
M – possibly parts of the laser box?

Assembling the MO1 board

First thing we'll do is solder up the MO1 board. The below photo shows the top side of the board with all the components in place. Take note of the color bands on the resistors, there are different resistance levels (1k & 4.7k). The dot location on the optocoupler in this orientation is in the lower right, the mosfet is silver side up. The bare wire you see to the left of the resistors is a clipped wire from one of the resistors after it was soldered. It is needed to jump from the resistor to the mosfet.

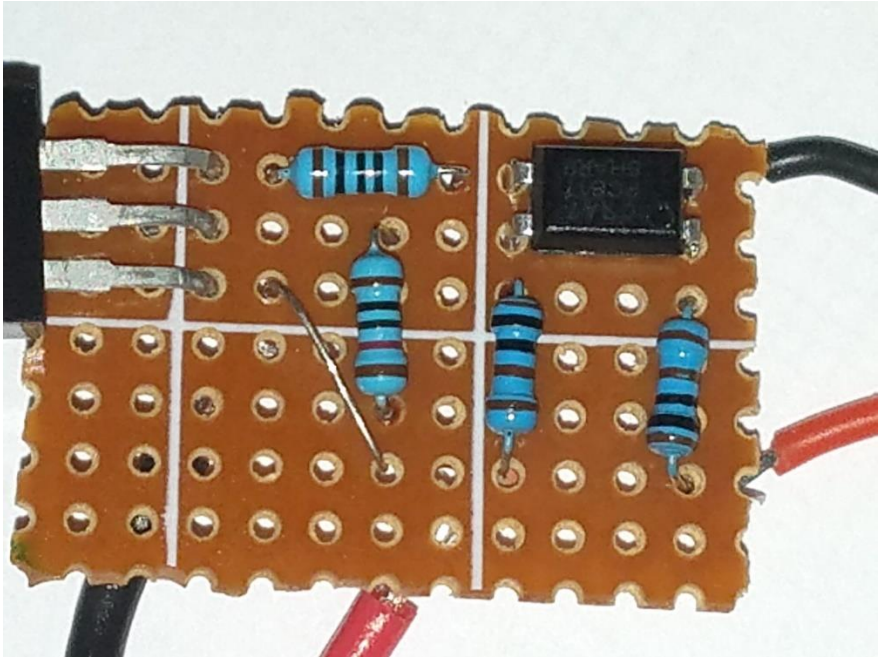

Below is the back side of the board. Note it is flipped horizontally so the mosfet is on the opposite side now. Feel free to make fun of my soldering skills.

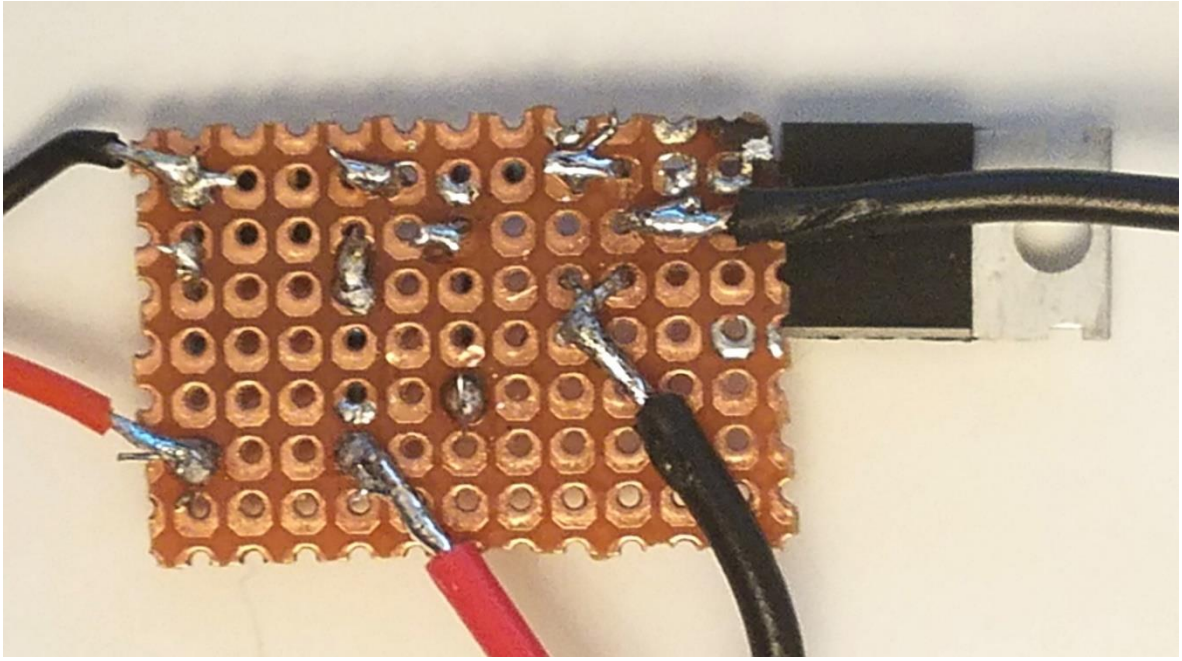

The two wires on the left of the above picture go to the TTL on the control board. The two on the bottom go to the DC-DC, the black one on the right goes to the switch

The below picture shows the connecting solder points circled.

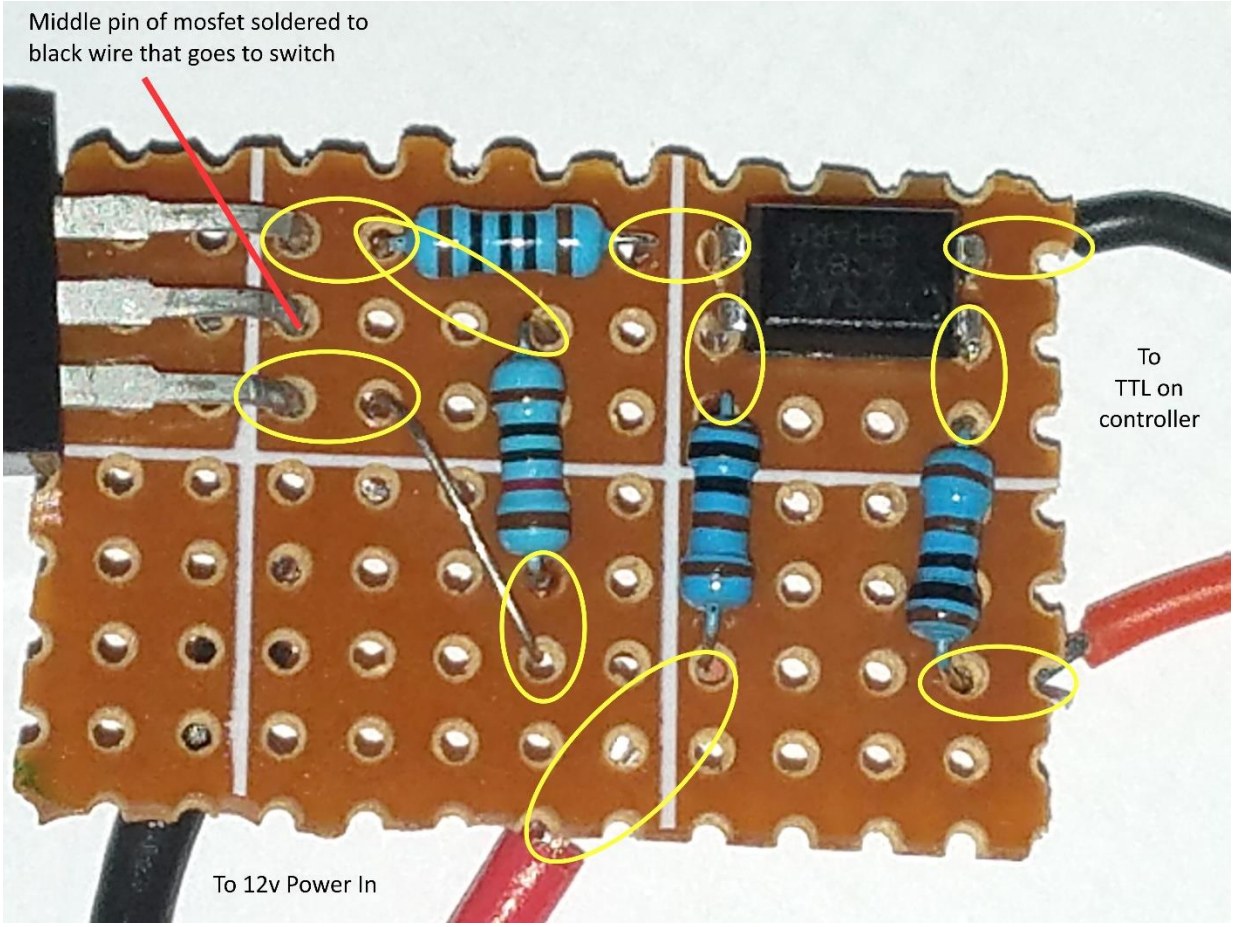

Your MO1 board is now complete.

Attaching Zener Diode to DC-DC Stepdown Converter

On the bottom of your DC-DC step down, you're going to solder the Zener Diode between the + and – pins of the OUTPUT. The diode is to protect the laser, if it gets too much voltage it will burn the diode shorting it out instead of sending the power to the laser.

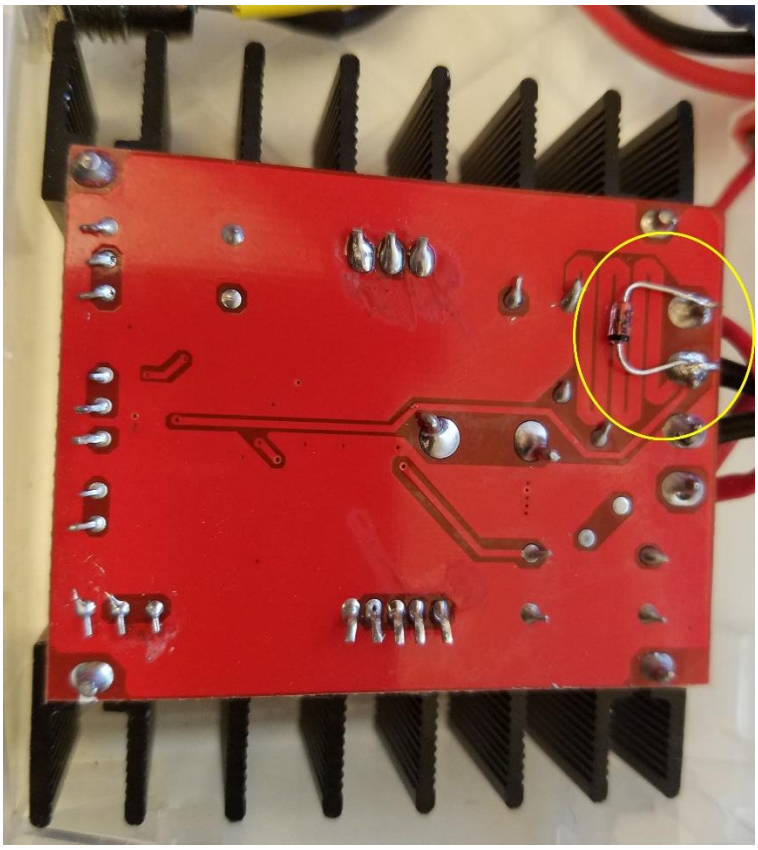

Preparing the control box

I can't give instructions here for the 3d printed box, as I didn't print one. I used a cheap clear plastic box from Wal-mart meant to hold crayons, I'm sure a soap box or sandwich box would work too. On the top of the box I cut holes for the fan, fan screw holes, and switch, and on opposite sides holes for the power input and wires going out to laser and TTL. When you install the fan, only put screws through opposite corners, and run the wires through the screw hole closest to them into the box so it can be attached to the wiring.

Assembling everything into the control box

Here's the official schematic from Endurance as of 3/18/19

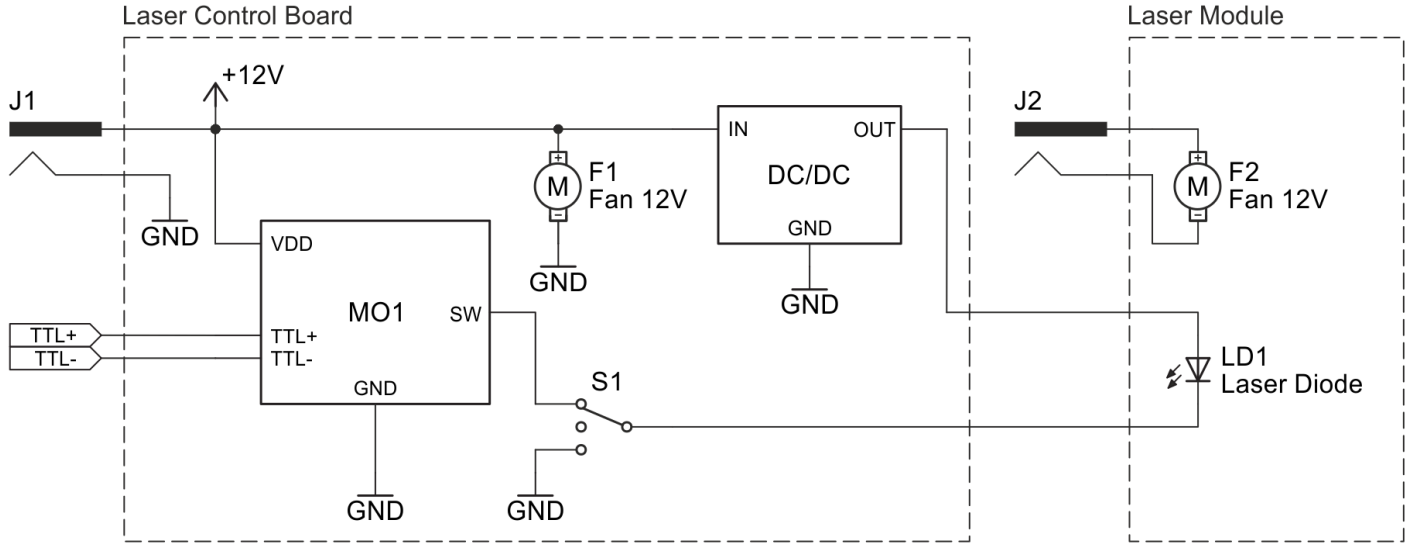

For those that want a simplified version:

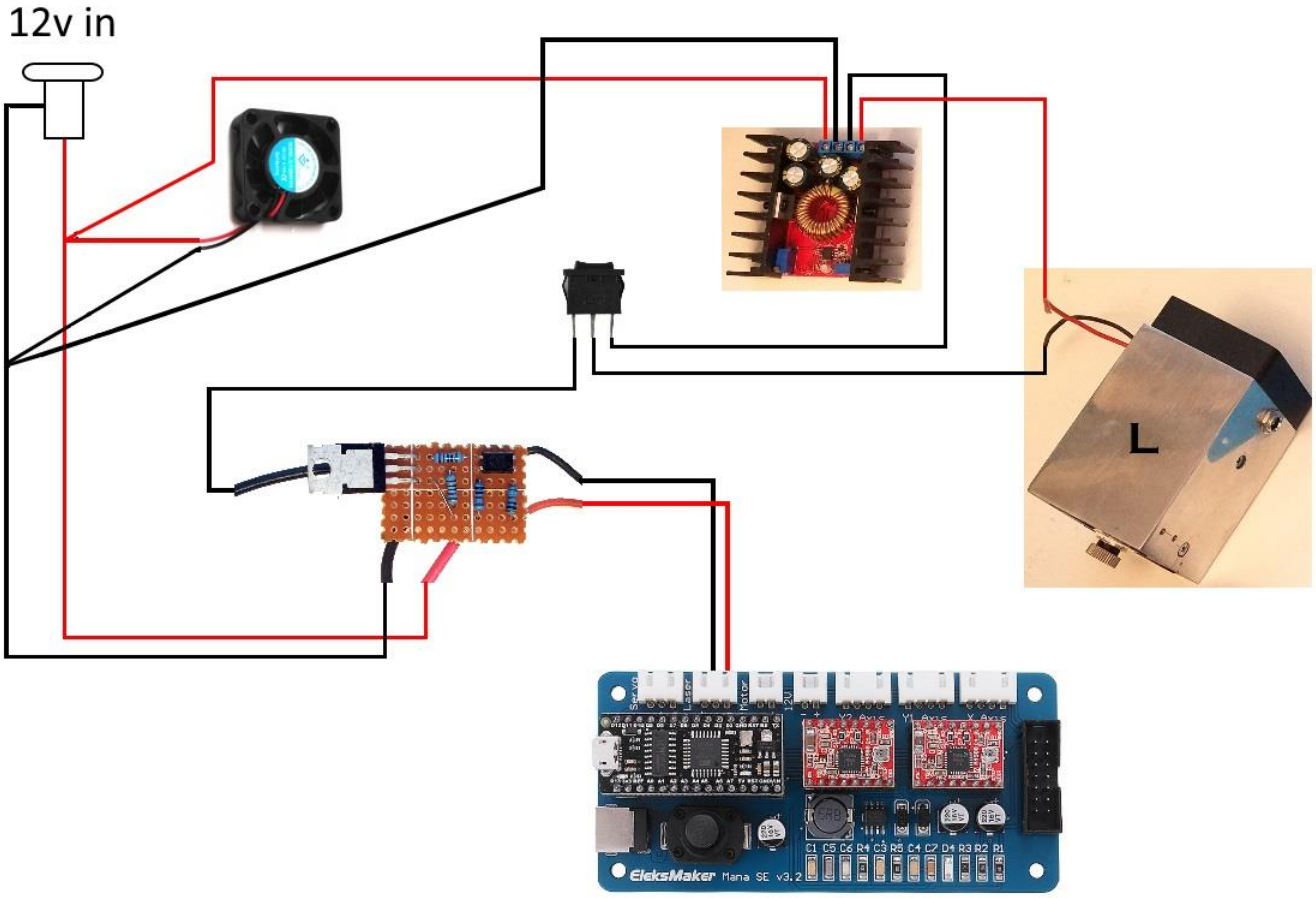

If wiring to an eleksmaker board you'll need to wire the two TTL wires coming off the MO1 board to the male JST-XH 3 pin connector to plug into the eleksmaker controller. Here's where you need that extension cable, which you clip in half. Red wire off MO1 board to "S" pin and black ground wire to "-".

Additional note for eleksmaker wiring:

I have an extended frame (1000mm x 400mm) and have wiring through cable chain. I do switch back and forth to my 2.5w laser, as I find there's some engraving it's better at because the 10w is too powerful. In order to avoid additional cabling I use a second JST-XH extension cable. I cut the extension in half and wire the two wires coming out of the laser the female end and the two wires going to the laser to the female end. Now when I want to switch from the 10w to the 2.5w I just unhook the 10w control box from the controller, plug in the original wire, and swap on the laser head end as well. See below, it may make more sense.

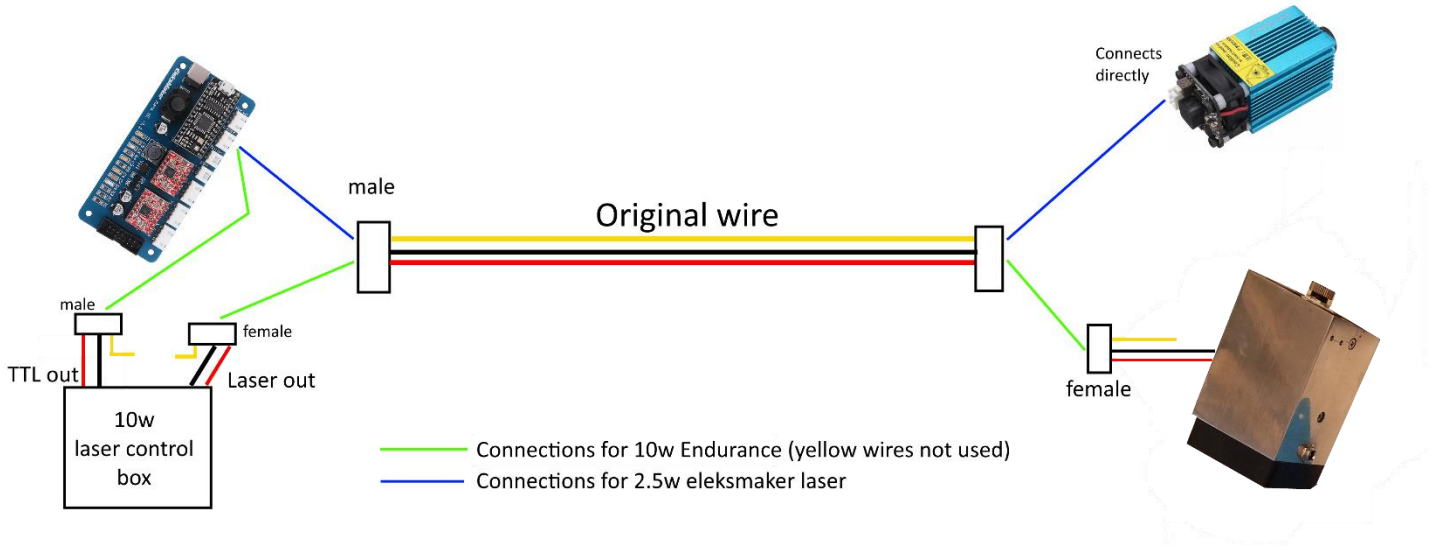

Tuning your DC-DC Stepdown Converter

Geroge recommended to me to run the laser at 4.5 volts and 4 amps. Others may run slightly higher, but you risk shortening the life of the laser. To start with, we'll get the laser close without any load on it. The below photo shows the important parts of the DC-DC converter.

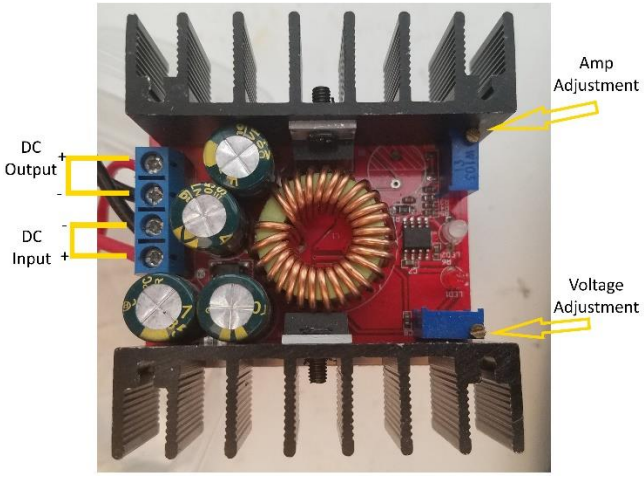

With power going to the DC-DC (Laser NOT connected!) place your voltmeter probes on the DC-DC output screws. Using your tiny flat screwdriver turn the voltage adjustment screw and set to 4.5v. Once voltage is set, switch your meter over to amps and with your probes in the same location adjust your amp adjustment screw to get your amps to 4.0. It's now set with no load, which is close to where you want to be. The two LEDs on the DC-DC converter will be red, showing that we're limiting the current and voltage.

Now we need to adjust the voltage and current under a load. Here's where you'll need the light bulb. Place the bulb across the DC-DC outputs as shown below.

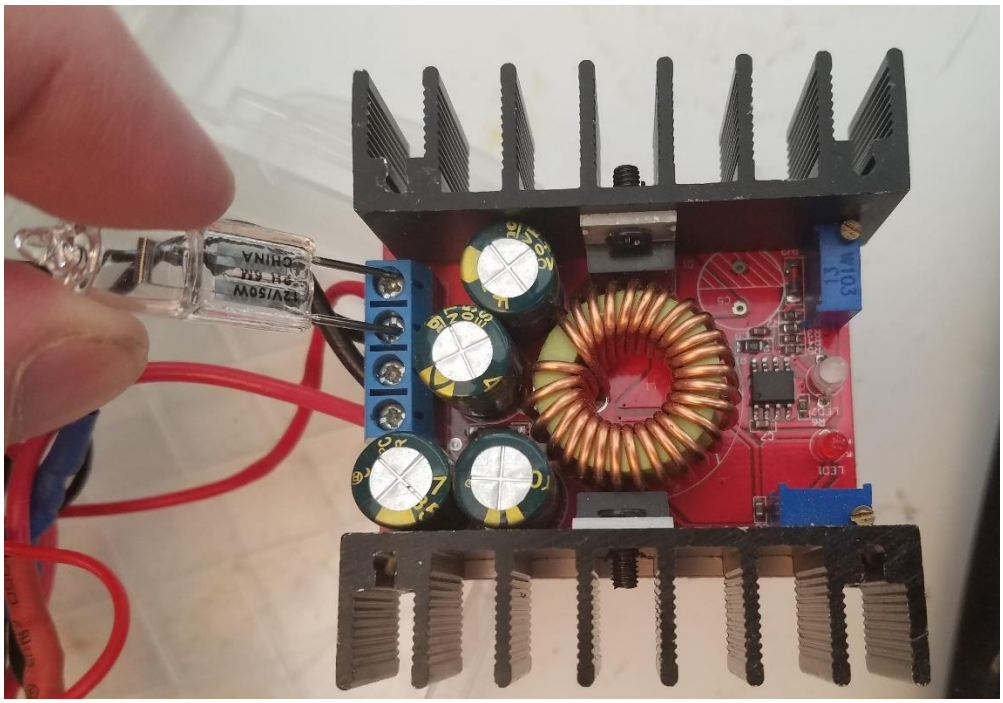

Your bulb should light up (and warning, it will get hot!). Repeat the previous steps of fine tuning the voltage and current to 4.5 volts and 4 amps with your probes and the light bulb on the DC-DC output. Unless you have 4 hands, you may be better off attaching short wires to the DC-DC output and either wrap them around your probes or use alligator clips.

Firing up the laser

With your DC-DC setup to limit the voltage and current, you can now attach the laser. One way on the switch (the side wired to the DC-DC) will fire the laser at full power constant on, the other way will be controlled by your software. If you want to fine tune your voltage and current again with the laser on you can, but be warned this is not suggested, and adjusting too much can quickly fry your laser diode!

Play with it, it's a freakin laser!

You've now got a 10w continuous laser. Go burn stuff. Cut stuff out. Engrave your significant other's dining room table (we accept no responsibility!). Make sure to share your experience and projects on the Endurance facebook group. Please note, anything posted on the facebook group may be used on the Endurance website unless you specifically ask for it not to be.

Credits & Thanks

Thanks go to George Fomitchev and Bob Waterfield for helping me get mine up and running, as well as the rest of the Endurance facebook group. Hopefully this will help somebody else along the way.